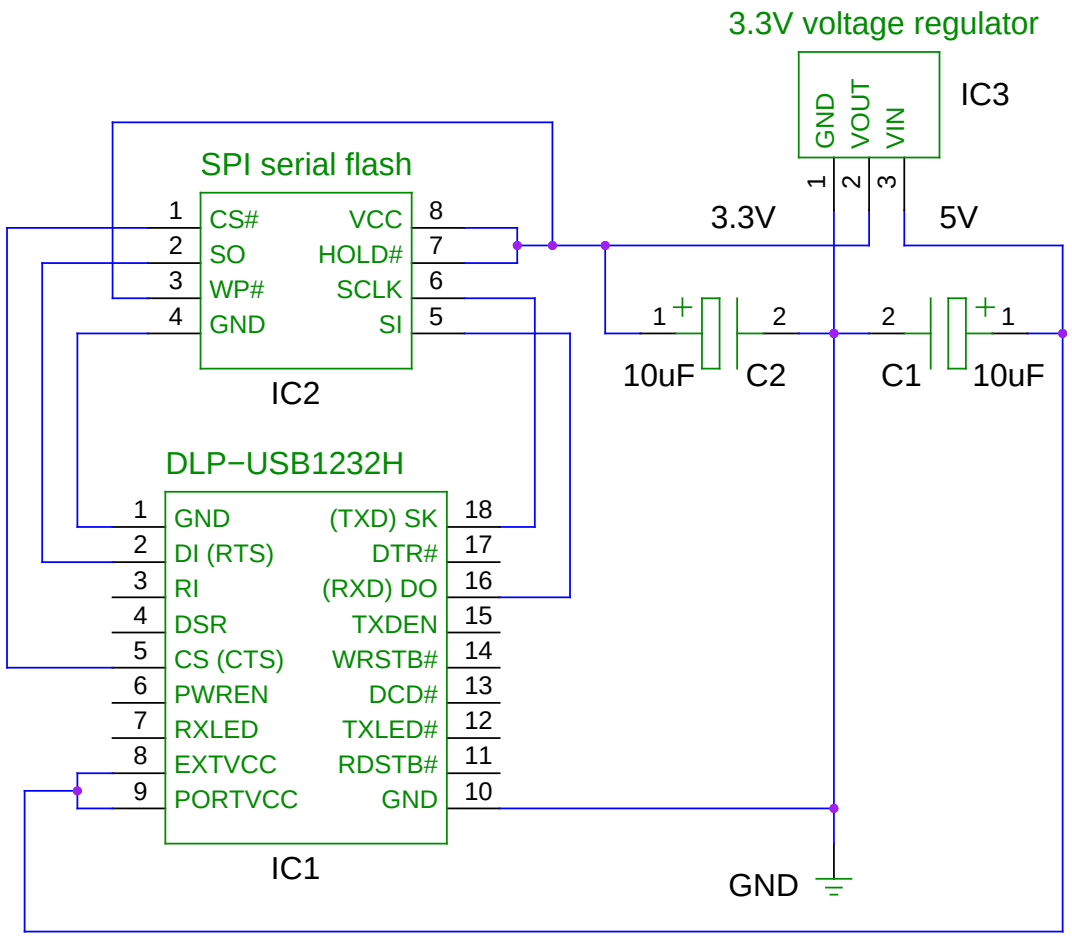

DLP Design DLP−USB1232H based SPI BIOS chip programmer

CC−BY−SA 3.0

Schematics created with gEDA/gschem (http://gpleda.org)

TITLE

FILE:

REVISION: 0.1

PAGE 1 OF 1

DRAWN BY: Uwe Hermann <uwe@hermann−uwe.de>